PS11 - "ODSL" (Offset Slotted Leg) Profiles with two offset slotted lower legs

Composite Fire Stop/Framing with "offset step" accommodates fireproofing up to 1 1/2" thick in head of wall and wall to wall (column) assemblies. Provides 100% unencumbered joint protection accommodating up to 1 1/2" overall movement with level III (seismic) UL certification.
Minimum G40 (20ga) and G60 (18ga and heavier) coating two legs with slots spaced 1" O/C for permanent attachment of studs per UL listed assemblies.

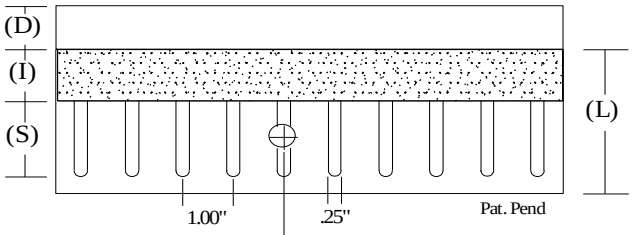

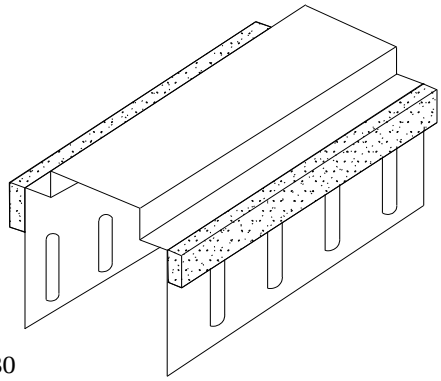

Widths (W)	Mil (Ga)
362 (3 5/8")	.030 (20)
400 (4")	.033 (20)
600 (6")	.043 (18)
800 (8")	.054 (16)
	.068 (14)

Depth (D)
.75"
1.375"
1.50"

Part Identification

Example: 362ODSL2150-30

362 (Track Width) ODSL (Profile) 2 (Series) 150 (Upper leg Depth) - 30 (Gauge)

ODSL1 - "Slotted Leg" (Fire Stop One Side)

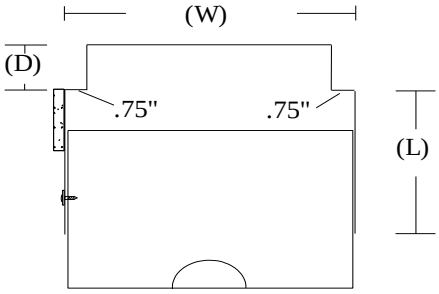

ODSL2 - "Slotted Leg" (Fire Stop Both Sides)

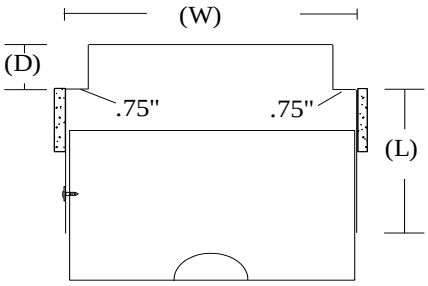

Profile	Lower Leg Length (L)	Strip Width (I)	Slot Height (S)	Joint Protection
ODSL	3.00"	1.00"	1.50"	.75"
ODSLW	3.00"	1.25"	1.50"	1.00"
ODSLX	4.00"	1.75"	2.00"	1.50"

UL, ASTM & Code Standards

UL2079, E814, E1966, ULC S115-M95
A1003, A653, A924, C645, C754, C955
AISI 2004 NAS
2006 & 2009 IBC
2007 CBC

Leed Points

MR 2.1 & 2.2 - Construction Waste: up to 2pts
MR 4.1 & 4.2 - Recycled Content: up to 2 pts
MR 5.1 & 5.2 - Regional Proximity
EQ 4.1 - Low Emitting Materials
EQ 9 - Enhanced Acoustical

Phone: (425) 869-2811 Fax: (425) 869-2300