BLAZE FRAME
www.BLAZEFRAME.com

CLASSIFIED c UL us

PS8 - "DSL-CD" (Slotted Both Sides Coated Deck) two slotted legs and ½"gap

Composite Fire Stop/Framing for use in up to 2 hr rated wall assemblies. Provides 100% unencumbered joint protection accommodating up to 1 1/2" overall movement with level III (seismic) certification. Minimum G40 (20ga) and G60 (18ga and heavier) coating two legs with slots spaced 1" O/C for permanent attachment of studs per listed assemblies in UL Fire Resistance Directory. Fire Stop located ½" down accommodating up to ½" fireproofing applied.

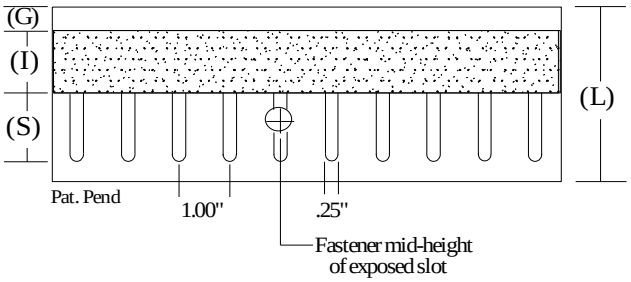

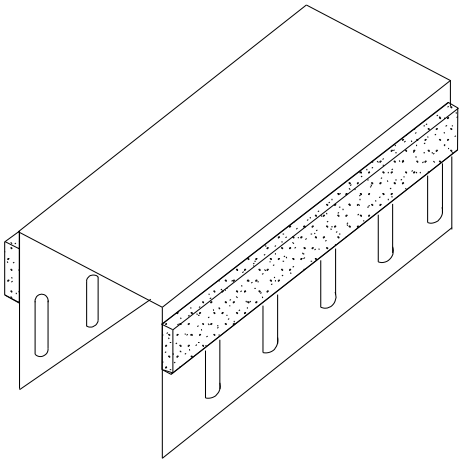

Widths (W)	Mil (Ga)
250 (2 1/2")	.030 (20)
362 (3 5/8")	.033 (20)
400 (4")	.043 (18)
600 (6")	.054 (16)
800 (8")	.068 (14)

Part Identification

Example: 362DSLCD2-30

362 DSLCD 2 - 30

Track Width / Profile / Series / Gauge

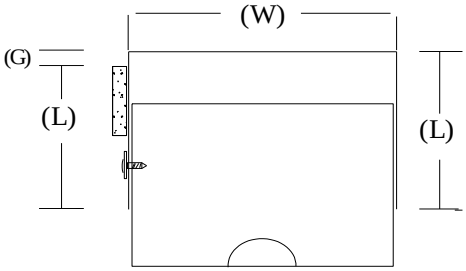

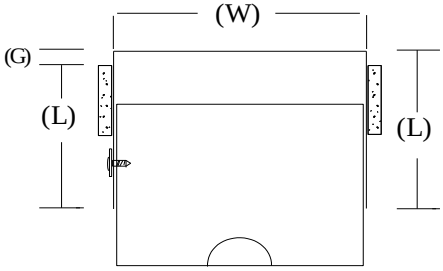

Profile	Gap	Leg Length	Strip Width	Slot Height	Joint
	(G)	(L)	(I)	(S)	Protection
DSLCD	.50"	3.00"	1.00"	1.50"	.75"
DSLWCD	.50"	3.25"	1.25"	1.50"	1.00"
DSLXCD	.50"	4.25"	1.75"	2.00"	1.50"

UL, ASTM & Code Standards

UL2079, E814, E1966, ULC S115-M95
A1003, A653, A924, C645, C754, C955
AISI 2004 NAS
2006 & 2009 IBC
2007 CBC

Leed Points

MR 2.1 & 2.2 - Construction Waste: up to 2pts
MR 4.1 & 4.2 - Recycled Content: up to 2 pts
MR 5.1 & 5.2 - Regional Proximity
EQ 4.1 - Low Emitting Materials
EQ 9 - Enhanced Acoustical

Phone: (425) 869-2811 Fax: (425) 869-2300